600 Amp Switch Replacement
Chief Judge: John Friley
(Journeyman Team Event)

Mean Time: 15 minutes

Drop Dead Time: 20 minutes

Event Summary:

This is a 4kV event working with Class II or higher rubber gloves off of the pole. Team will replace a 600 amp under-slung switch on an 8' cross arm. The load cannot be interrupted. The permanent jumpers will have two-bolt terminal pads mounted to them and bolted to the switch.

Event Specifications:

1. See General Rules.
2. Team will be allowed a five minute set up time for questions and set up.
3. All permanent connections shall be wire brushed.
4. Electric continuity must be maintained at all times. Temporary mechanical jumpers must be utilized and must be rated for a minimum of 15kV. No unprotected incidental contact will be allowed with unprotected mechanical jumpers. A section of rated line hose may be placed on the mechanical jumpers to prevent incidental contact with the crossarm or linemen.
5. Bolts are 1/2 inch x 1-1/2 inch Stainless. One flat washer on either side of the connection with a lock washer on the nut side.
6. Both sides of neutral and clevis must be covered
7. Primary must be covered while replacing switch.
8. Permanent jumpers will be unbolted and folded back under cover.
9. Switch must be tested by operating it before temporary jumper comes off.
10. Switch must be mounted the same way it was before event.
11. Switch will have to come off handline and touch the ground before sending back up.

Rodeo Material List 2017

600 A switch Change-Out

600 A switch	Chance M3H62BC
Cross Arm Braces	Aluma-Form AF626
Cross Arm Pins	Chance 881
Dead end polymer bells	Ohio Brass 4010150215
Clevis	Chance 0337
Secondary	DE455
Dead end shoes	Chance ADEZ47
2 Hole Pads	Hubbell VAULH1123BN
½” Stainless bolts and washers	

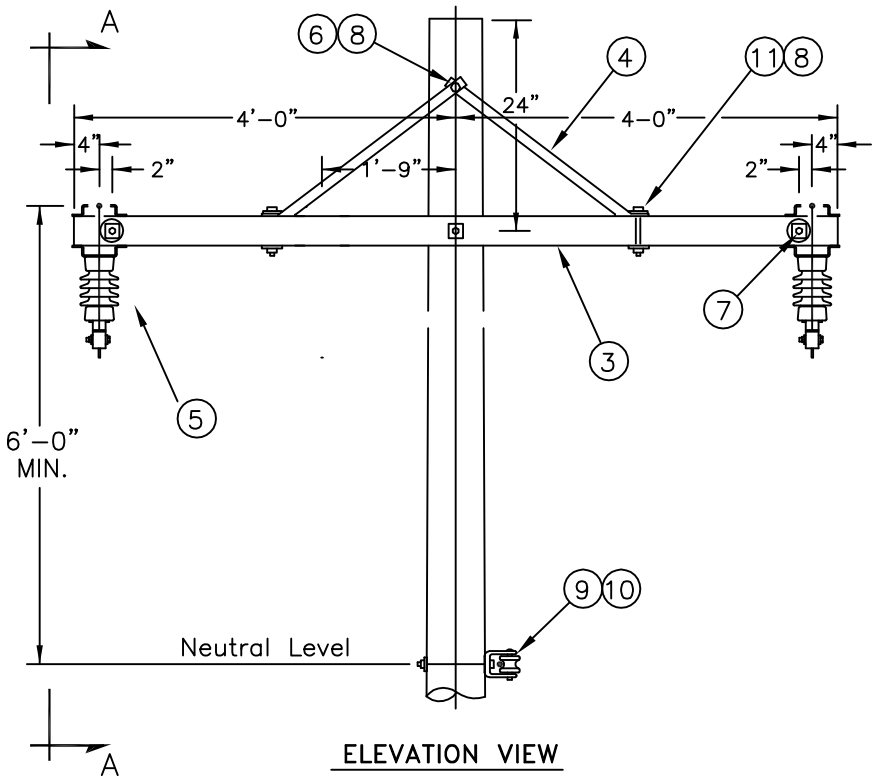

ELEVATION VIEW

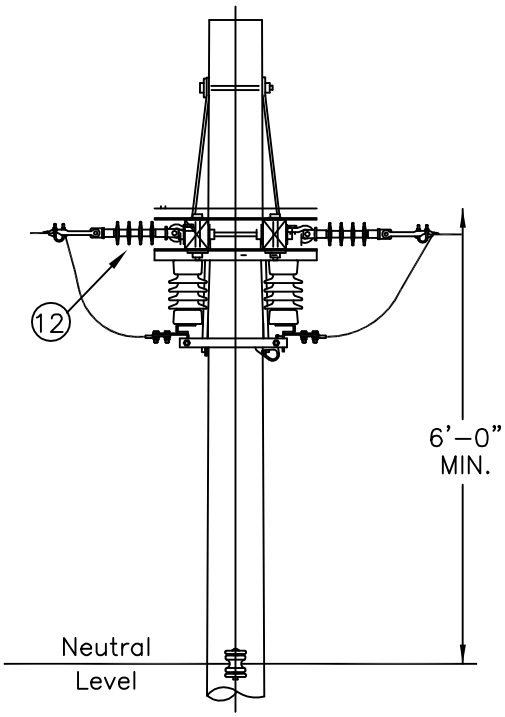

VIEW A–A

ITEM	QTY.	MATERIAL	MATERIAL DETAILS
1	6	15kV Insulator, Suspension Type	O.B. # 401015–0215
2	6	Cable Suspension Clamp	Chance ADEZ47
3	2	8' Crossarm	3–3/4" x 4–3/4" x 10'
4	2	Crossarm Brace (pair)	AF626
5	3	600 Amp Sectionalizing Switch	Chance M3H62BC
6	2	Bolt, Thru 5/8" x Required Length	
7	3	Bolt, DA, 5/8" x Required Length	
8	11	Washer, Square, 2"x 2"x 11/16" Hole	Chance: 6812
9	1	Spool Insulator	DE455
10	1	Clevis Bracket	Chance: 0337
11	4	Bolt, Thru, 1/2"x Required Length	
12	6	Eye Nut	Chance B14A

AMP PUBLIC POWER PARTNERS ™

600A Switch Replacment

DATE	APPROVED BY	Construction Standard